NOTES:

1. CONTACT MAT'L: CARBON STEEL, 304 SS OR 316 S STEEL
2. GYRATOR MOTOR TO BE 1 HP, TENV, 230 OR 460/3/60 ,
3. ALL ELECTRICAL CONNECTIONS TO BE FLEXIBLE.
4. ALL CONNECTIONS TO LIVE BOTTOM BIN TO BE FLEXIBLE.

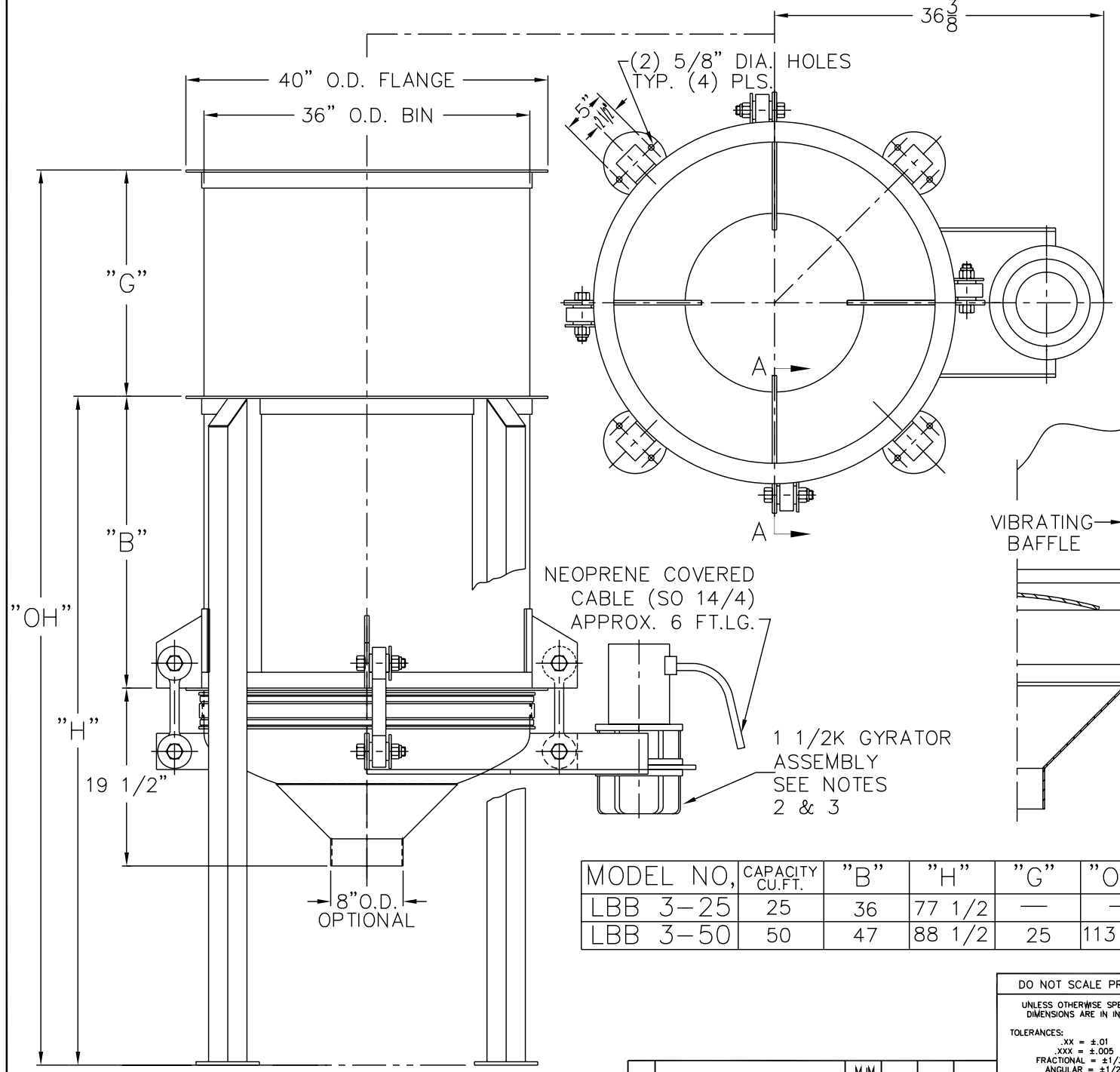

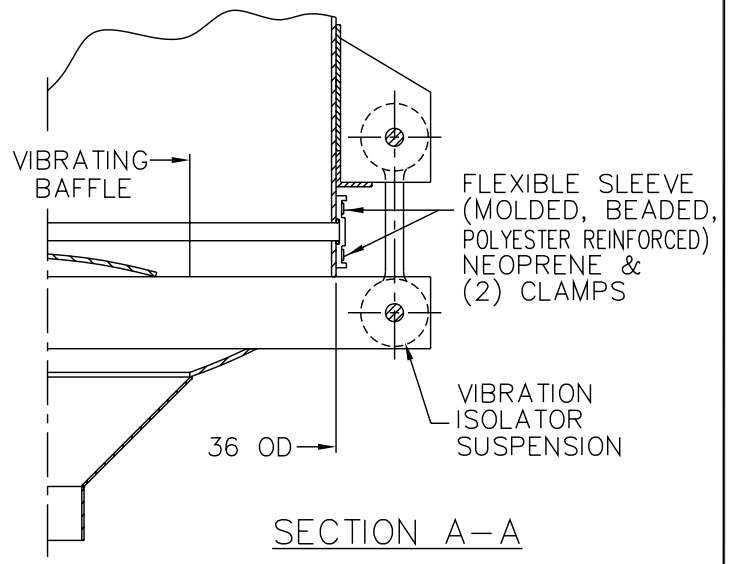

SECTION A–A

MODEL NO,	CAPACITY CU.FT.	"B"	"H"	"G"	"OH"
LBB 3–25	25	36	77 1/2	—	—
LBB 3–50	50	47	88 1/2	25	113 1/2

THE RECIPIENT OF THIS DOCUMENT AGREES NOT TO REPRODUCE, COPY, TRANSMIT OR USE THIS DOCUMENT AND/OR THE INFORMATION CONTAINED IN THIS DOCUMENT IN WHOLE OR IN PART, FOR ANY PURPOSE, EXCEPT WITH THE WRITTEN PERMISSION OF VIBRA SCREW INCORPORATED.

DO NOT SCALE PRINT

UNLESS OTHERWISE SPECIFIED DIMENSIONS ARE IN INCHES

TOLERANCES:
.XX = ±.01
.XXX = ±.005
FRACTIONAL = ±1/32"
ANGULAR = ±1/2°
BREAK SHARP EDGES .005–.015
ALL SMALL FILLETS .020–.040R.

REV.	DESCRIPTION	DWN. BY DATE	CHK. BY DATE	APP. BY DATE	ELEC. APP. DATE
1	RELEASED FOR STANDARD	MJM 6/30/01			

Vibra Screw Incorporated
755 Union Blvd. Totowa, N.J. 07512-2207

TITLE 3–25 TO 50 LIVE BOTTOM BIN CENTER FLAT STOCK CROSSMEMBER AND 1 1/2K GYRATOR

SCALE 1/8=1

CAD FILE NAME LBB\STDASSY\17988-SD

DWG. NO. 17988–SD

REV. NO. 1